DAEYANG Electric Company

ELECTRONIC EQUIPMENT

FOR NAVAL SHIPS

www.daeyang.co.kr

DAEYANG

Technology developments and maximizing people's abilities are at the core of our philosophy and vision

We believe the purpose of company's existence is to support its members and society by producing continuous values with help of technology and human resources. Our employees are the best resources we can rely on, so we value the talented upbringing of our workers. Since the foundation of company we have implemented this philosophy and we will continue to put forth all our effort to achieve our goals through expanding technology and maximizing our employees' abilities.

History

1977

1977-05 DAEYANG Electric Co., Ltd. founded.

1977-12 Designated as manufacturer of marine electric equipment by Ministry of Commerce and Industry.

1980

1985-09 Selected as an "Excellent Exporting Company" by the Korea Development Bank.

1988-03 Established an affiliated company, DAEYANG Instrument Co,Ltd.

1988-12 DAEYANG R&D center founded.

1989-01 Established an affiliated company, DAEYANG Electric Supply Co., Ltd.

1990

1990-11 Selected as a defence industry company by the Ministry of National Defense.

1992-03 Signed a technical license agreement with WITT & SOHN, Gemany.

1995-08 Nominated as one of the most prominent medium-sized enterprises with advanced technologies by ministry of commerce and industry.

2000

2000-07 Selected by 'Small & Medium Business Administration' for "Venture Company".

2001-11 Awarded the "Bronze Tower Order" for contribution to industry by Ministry of Commerce, Industry and Energy

Awarded the "Export Tower" by Ministry of commerce, Industry and Energy.

Awarded the "Leading Company" by Ministry of commerce, Industry and Energy.

2003-02 Selected as a "National Manufacture Research center" by Korean Ministry of Commerce, Industry and Energy.

2003-09 Completed the development of Goniometer.

2004-09 Completed the development WICS (Wireless Interior Communication System).

2004-12 Completed the development of Ni-Rh electronic reflector.

2005

2005-05 Expanded & moved Noksan factory for Fan & Ventilation Division.

2006-06 Certified as "INNO-BIZ" company by SMBA (Small and Medium Business Administration).

2006-11 Co-developed with KORDI an Unmanned Underwater Vehicle (UUV) for deep sea exploration at 6,000m depth in the ocean successfully.

2007-01 Established design research center for interior lighting equipments of cruise in Seoul.

2007-02 Developed of LED flat lighting equipments.

2008-07 Completed the Development of new explosion proof lighting equipments for land use.

2009-06 Developed LED lighting for indoor use.

2010

2010-11 Awarded 30 Million US Dollar Export tower at 47th National Export Day.

2011- 01 Registered on KHNP's Approved Vendor List for EZ72A (Incandescent, Sodium Lighting Fixtures & Lamps) and EZ72B (Fluorescent Lighting Fixtures & Lamps, Dimming Control System).

2011- 07 Flotation on the stock exchange. (Listed on KOSDAQ)

2012-01 Acquired KSB (Korea Special Battery).

2012-07 Completed development of MDV (Mine Disposal Vehicle) for Korea Navy.

2012-11 Expanded & moved R&D Center and Electric & Electronic factory to Noksan factory.

2013-03 Awarded "Industrial Service Medal" on the 47th taxpayer's day.

2013-04 Expanded & moved DAEYANG Instrument Co.,Ltd to Noksan factory.

2014-10 Awarded "Industry development of LED & International competitiveness Improvement" by minister of ministry of Trade, Industry and Energy".

2015-07 Selected as a World Class 300

2015-08 KHNP(KOREA HYDRO & NUCLEAR POWER CO.,LTD) Approved Vendor (EZ08) (1210)

2015-12 Award '50 Million US Dollar Export Award' at 52th Export Day.

2016. 3 Awarded 'Exemplary Taxpayer' of Busan Metropolitan City

2016. 3 Expanded Sensor Division

2016.12 Expanded SI Division

2017-11 Awarded "Korea Technology Award" by ministry of Trade, Industry and Energy

2018-12 Awarded " Mecenat Award" by Busan Metropolitan City office of Education

2019-05 NET (New Excellent Technology) certified by Korean government.

2019-11 Awarded "Korean World-class Product Award 2019" for Helideck Lighting

2019-12 Awarded "Hidden Champion 100 in Materials·Components·Equipment" Awarded the best employer prize by Busan Metropolitan City

2020

2020-11 Awarded "Prime Minister's Award for Excellent company in new technology development" for Helideck Lighting

2021-07 Awarded "Gold medal" by EcoVadis Sustainability Rating

2021-09 Awarded 'First grade' in ESG Assessment

2022-03 Awarded "President's Citation" at the 56th taxpayer's day

Ver. 2023-09-26

Organization

Number of employee (2023) 370

HEAD OFFICE Busan, Korea

SENSOR DIVISION Incheon, Korea

NOKSAN FACTORY Busan, Korea

Central R&BD Centre
Magok, Korea

Major Products

Lighting

Indoor Lights
Outdoor Lights
Navigation Lights & Signal Lights
Helideck/Helipad/Heliport Lighting
Hazardous Area Lights
Receptacle & Switch
Reefer Container Socket
Lighting Architecture

Communication & Navigation

Integrated Communication System (ICS)
Reefer Container Monitoring System (RCMS)
Power Cable Transmission System
Integrated Navigation System (INS)
Electro-Magnetic Speed Logs (EM-LOG)
Degaussing/Deforming System
Ship Shore Communication Link System (SSCLS)

Panel & Switchboard

Main Switchboard
Emergency Switchboard
Power Distribution Panel
Engine Control Console
Bridge Control Console
Switchboard for Train

Underwater Vehicle

Remotely Operated Vehicle (ROV)
Autonomous Underwater Vehicle (AUV)
Deep Sea Unmanned Underwater Vehicle (UUV)
Mine Disposal Vehicle (MDV)

Nautical Instrument

Anemometer & Anemoscope
Rudder Angle Indicator
Weather Information System (WIS)
Whistle

Sensor

Temperature Sensor
Pressure Sensor
Weather sensor

ELECTRONIC EQUIPMENT FOR NAVAL SHIPS

Contents

05_ 1. MSBD Main Switchboard

06_ 2. IC-SWBD Communication Switch Board

07_ 3. PLC Power Load Center

08_ 4. EPCC Electric Plant Control Console

09_ 5. SEA LACER Mine Disposal Vehicle

10_ 6. EM-LOG Power Load Center

13_ 7. DRT Dead Reckoning Tracer

14_ 8. PT-D1K Plotting Table

1 MSBD

Main Switchboard

The MAIN SWITCHBOARD is the main power supply equipment for the Navy and is specially designed in accordance with the requirements of Military Standards, national standards, and customers.
The structures of the panel are fully able to withstand mechanical stress like shock and vibrations.
This is verified by lab tests.

Applicable Standards

Military Standard of USA

Specification

Rated Voltage	500V AC.Max
Rated Frequency	60Hz
Rated current	8000A, Max
Withstand current	100 KA, rms, sym.1sec
Ambient Temperature	55 °C Max
Relative Humidity	95%
Rolling & Pitching	U.S. DOD-STD-1399, SEC, 301
Shock & Vibration	MIL-S-901D, MIL-STD-167
EMI & EMC	MIL-STD-461/2, 464/1310

2 IC-SWBD

Communication Switch Board

Applicable Standards

Military Standard of USA

Specification

Functional Characteristics	Power distribution and control	AC 115V, 60Hz, Ø3	
		AC 115V, 400Hz, Ø3	
	Power monitoring	Voltage	0~150V, 60 and 400Hz
		Indicators	Power available
		Overload protection	Fuses
		Alarm	Bus failure Alarm
Capability	Switches	Type 1SR	10A, 120V AC
		Type 3SR	30A, 450V AC
		Type 6SR	60A, 450V AC
		Type S4JR	10A, 125V AC
Ambient temperature	55 °C Max		
Relative Humidity	95%		
Rolling & Pitching	U.S. DOD-STD-1399, SEC, 301		
Shock & Vibration	MIL-S-901D, MIL-STD-167		
EMI & EMC	MIL-STD-461/2, 464/1310		

3 PLC

Power Load Center

Features

Arrangement of controls and use and devices in each group from center according to the frequency of use and sequence of normal operation.

Specification

Type	SELF STANDING TYPE & WALL MOUNTING TYPE & FLUSH MOUNTING TYPE
Rated voltage	440V & 220V AC (others, option)
Rated frequency	50/60Hz
Frame material	Steel (others, option)
Power Line inlet	Bottom & rear (others, option)
Protection degree	IP22, IP23, IP44 (others, option)

4 EPCC

Electric Plant Control Console

Features

- All controls below shoulder level.
- Arrangement of controls and use and devices in each group from center according to the frequency of use and sequence of normal operation.
- Full consideration to avoid possible mis-operation in any case.
- Protection degree of this console is IP21 or IP22.

Specification

Type	PIANO TYPE & SELF STANDING TYPE
Rated voltage	440V AC (others, option)
Rated frequency	50/60Hz
Frame work	Steel (others, option)
Access	Front and rear
Protection Degree	IP21, IP22 (others, option)
Power line inlet	Bottom (others, option)

5 SEA LANCER

Mine Disposal Vehicle

Objective

SEA LANCER is an equipment for searching, identification and disposal of the mines.

Specification

Dimension (m)	3.650 x 0.55
Material	AL6061, FRP
Sea State	Below 2.5 m
Depth	000 m
Max. speed	0 knots
Max. time	• 0 knots : over 1.5 hours • 0.0 knots : over 3 hours
Thruster	For./Rev(2), Ver.(2), Lat(2)
Telemetry	Fiber Optic / Coaxial / RF
Power	Lithium Polymer Battery
Sensors	• USBL, GPS, DVL, • Multi-beamSonar, • Forward-looking.Sonar • Altitude Sonar, Camera/Light • Pressure sensor, Compass, ...

6 EM-LOG

Power Load Center

Repeater

Main Unit

Technical Drawing

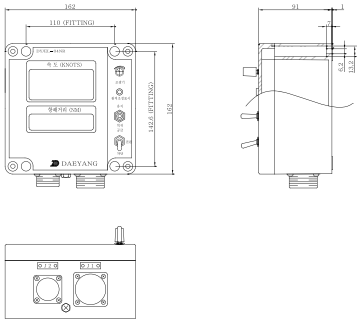

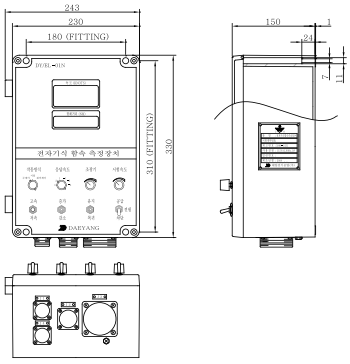

Electro-Magnetic Speed Log

EM-LOG performs the measurement of a ship's speed when travelling through the water.
This equipment indicates the speed of naval ships and voyage distance using the signal responded from a sensor that is projected from ships into the water.

Features

EM-LOG indicates the speed of naval ships and voyage distance.
It provides an interface signal to other equipment that requires speed signal such as, radio finder, submarine detector, navigating equipment, fire controls.

Indicator-Transmitter

PRODUCT MODEL	DY/EL-01N
PRODUCT NAME	INDICATOR-TRANSMITTER
SPECIFICATION	AC110/220V, 60HZ, 200W
MUNSEL	FS26307
MATERIAL	ALUMINUM DIECASTING BOX

Specification

No	NSN	P/N or S/N	Name		Q'ty
1		1A10 B1	AL DIECATING BOX	N91003003	1
2		1A10 B2	MIDDLE PLATE	N91003004	1
3		1A10 B3	FRONT PANEL A	N91003005	1
4		1A10 B4	FRONT PANEL B	N91003006	1
5			HINGE		2
6		1A10 B9	DISPLAY PANEL	N91003008	1
7		1A10 B10	DISPLAY PANEL	N91003008	1
8	5998-37-502-2498	1A10 A5	PCB CARD	N91003009	1
9		1A10 B11	GUIDE BRACKETA	N91003010	2
10			NOISE FILTER		1
11	5355-37-502-2427	1A10 N1,2	HANDEL	N91003012	2
12	5930-37-502-2511	1A10 S4,5,6	SWITCH	N91003013	3
13	5930-37-502-2453	1A10 S2	SWITCH	N91003013	1
14	5355-37-502-2440	1A10 N3,4	HANDLE	N91003014	2
15	5998-37-502-2479	1A10 A1	PCB CARD	N91003015	1
16	5998-37-502-2480	1A10 A2	PCB CARD	N91003016	1
17		1A10 A7	PCB CARD		1
18		1A10 P1,2,3,4,5,6,7,8	SUPPORT		12
19		1A10 B156	BRACKET	N91003019	1
20		1A10 S1	SWITCH	N91003020	1
21		1A10 S3	SWITCH	N91003020	1
22	5935-00-280-1893	1A10 ON1	RECEPTACLE		1
23	5935-00-149-3340	1A10 ON2	RECEPTACLE		1
24	5935-00-767-0623	1A10 ON3	RECEPTACLE		1
25	5905-37-502-2645	1A10 IR3	VR	N91003022	1
26	5905-37-502-2659	1A10 IR2	VR	N91003020	1
27	5998-37-502-2484	1A10 A4	PCB CARD	N91003023	1
28		M 3 x 8.0 L	SCREW	KS B 1021	14
29		M 3 x 12.0 L	SCREW	KS B 1021	9
30		50VA	TRANSFORMER	KS B 1021	1
31		M 3 x 12.0 L	SCREW	KS B 1021	4
32		M 3 x 15.0 L	SCREW	KS B 1021	12
33		M 4 x 15.0 L	SCREW	KS B 1021	4
34		M 6 x 20.0 L	SCREW	KS B 1021	7
35		M 4	NUT	KS B 1015	7
36		M 3	NUT	KS B 1015	4
37		1A10 IR1	VR	N91003020	1
38	5930-37-502-2644	1A10 F1,2	HUSE HOLDER		2
39		EMI 가스켓	GASKET		1
40		M 6 x 30.0 L	SCREW	KS B 1021	4

Indicator-Transmitter

PRODUCT MODEL	DY/EL-04N (R)
PRODUCT NAME	REMOTE-REPEATER
SPECIFICATION	AC110/220V, 60HZ
MUNSEL	FS26307
MATERIAL	ALUMINUM DIECATING BOX

Specification

No	NSN	P/N or S/N	Name		Q'ty
1		1A11 B1	AL DIECATING BOX	N91003036	1
2		1A11 B2	MIDDLE PLATE	N91003037	1
3		1A11 B3	FRONT PANEL A	N91003038	1
4		1A11 B4	FRONT PANEL B	N91003039	1
5		EMI 가스켓	GASKET		1
6		1A11 B9	DISPLAY PANEL	N91003008	1
7		1A11 B10	DISPLAY PANEL	N91003008	1
8	5998-37-502-2476	1A11 A5	SMPS	N91003040	1
9			KNOB B	N91003014	1
10			METER	N91003020	1
11			LAMP ASSY	N91003058	1
12		1A11 S1	TOGGLE SWITCH	N91003013	1
13		1A11 S2	TOGGLE SWITCH	N91003013	1
14		1A11 CN1,2	CONNECTOR	N91003021	2
15		1A11 A1	PCB CARD	N91003015	1
16		1A11 P1,2,3,4,5,6,7	SUPPORT		8
17		1A11 SC1	SCREW	KSB1021	8
18		1A11 SC2	SCREW	KSB1021	5
19		1A11 SC3	SCREW	KSB1021	4
20	6210-37-502-2519	1A11 LP1	LED		1
21	5980-37-502-2499	1A11 LED1	LED		1

7 DRT

Dead Reckoning Tracer

Product Model	SYN-D1K
Product Name	DRT (Dead Reckoning Tracer)
Specification	Display location on the navigation map by light spot after received the current location, angle and speed of the ship. Supply functions are necessary for military operations that convert scale of navigation map, supply sailing information, support sailing plan, alarm function

Technical Drawing

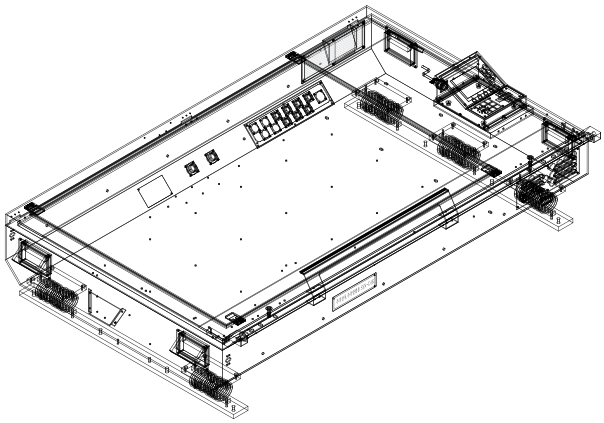

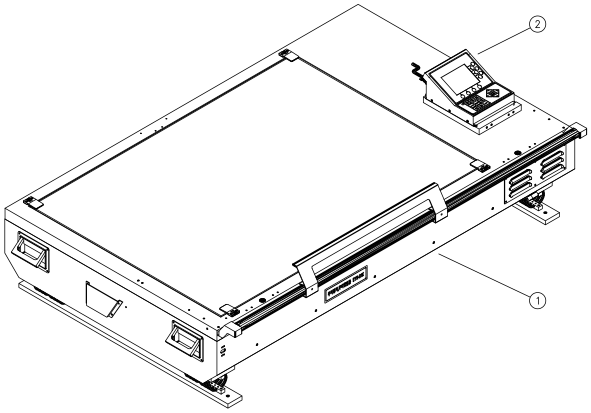

Error(scale of 1:50000)	≤±1.0 mm ≒ ±50 m
Resolution	0.12 mm
Plotting Error	±1.5 mm

Interface Equipment	**EM-LOG**	Synchro(115V/400Hz), 200ppnm, Serial (NMEA0183)-Option
	COMPASS	Synchro(115V/400Hz), Serial (NMEA0183)-Option
	Position Indicator	GPS, DECCA, LORAN-C Serial (NMEA0183)-Option
	Printer	RS-232C-Option

Specification

No	NSN	P/N or S/N	Name	Q'ty
0	660537-5053545	Q55016120	DRT assembly	1
1	660537-5054674	Q55016121	Main body assembly	1
2	534037-5055796	Q55016385	User console assembly	1

8 PT-D1K

Plotting Table

Plotting Table

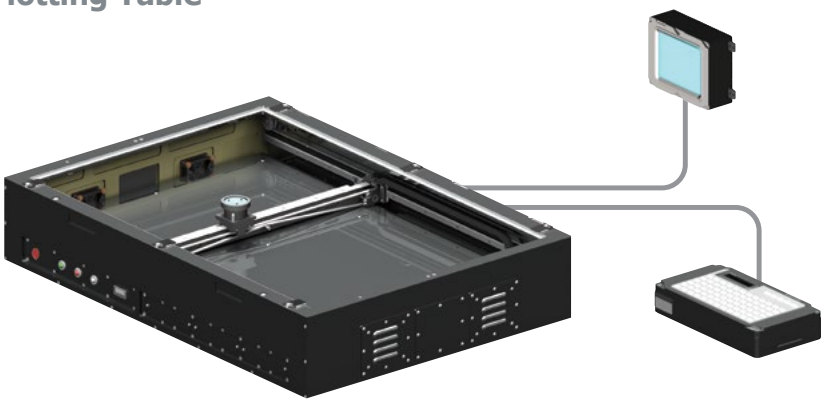

▶ Azimuth circle on a chart

PT-D1K plotting table is displaying real time information on own ship and multiple target provided by a variety of ship sensors or entered manually. An azimuth circle projected onto the underside of a chart is used to plot an own ship and target position.

- Main features including
  - Interface with ship sensors in order of priority
  - Plotting position of own ship and target
  - History and future position
  - Dead Reckoning
  - Waypoints
  - CPA
  - MOB
- Low noise technology complied with MIL-STD-740-1/2
- Shock resistance using half sine wave, 220m/s², 20ms
- Vibration resistance complied with MIL-STD-167-1A Type I

Specification

▶ Plotting Table

▶ Display Unit

▶ Keypad Unit

Product Name	Plotting Table	Display Unit	Keypad Unit
Dimensions (LxWxH) (mm)	822.5 x 1154 x 218	100 x 330 x 230	170 x 325 x 66.9
Weight	97 kg	6 kg	3 kg
Power	115 VAC		
Interface	RS-422		

MEMO

Our Valuable Customer

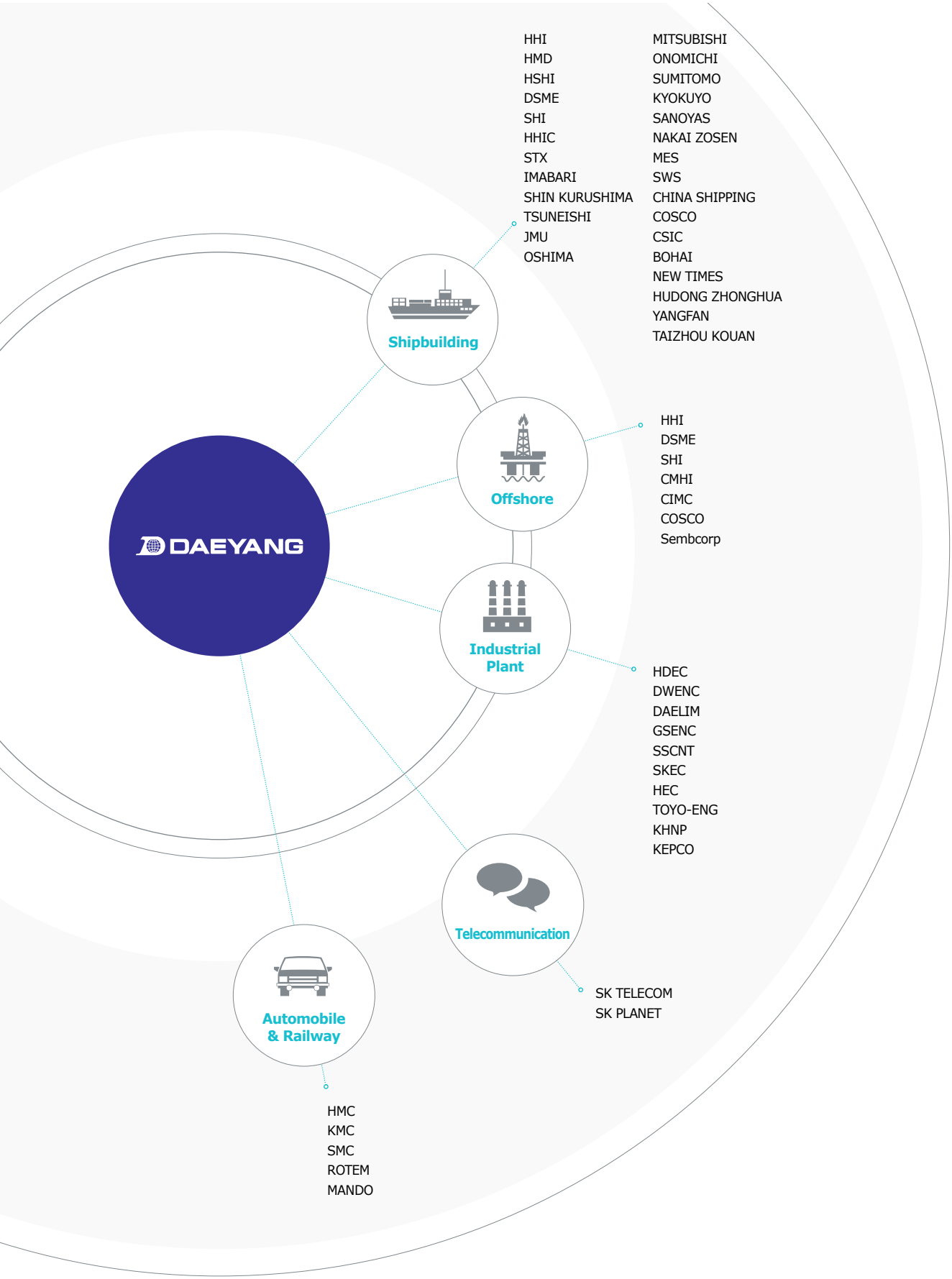

Worldwide Service Network

National	Company	Website
Argentina	Turbogen	http://www.turbogen.com/
Australia	AMI Group	http://www.amigroup.co/
	Read's Electric Company PTY. Ltd	http://www.readselectric.com/
Belgium	Maintenance Partners NV	https://maintenancepartners.com/
Brazil	Metalock Brasil	http://www.metalock.com.br/
Canada	Oasis Marine Services, LTD.	http://www.oasismarine.ca/home.htm
China	CETCME	http://www.cetcme.com/
	Huludao Haitong electric equipment manufacturing Co., Ltd.	http://www.hldht.cn/
	Jiangsu Hiscaler Electric Co., Ltd	http://www.hiscaler.com/
	Saiernico Electric & Automation Ltd	http://www.saiernico.com/
	Seven Seas Electronic Co., Ltd	http://www.sevenseas-electronic.com/
	Shanghai Marine Diesel Engine Research Institute	http://www.csic-711.com/
	Shanghai NSE Co. Ltd.	http://www.nse.net.cn/
	Zhejiang Xin Ya Electric Development Co. Ltd.	http://www.xy-cd.com/
Colombia	Electronica Maritima ITEC SAS	http://www.iteccolombia.com/
	Servicios Portuarios S.A.	http://www.serport.co/
Cyprus	Totottheo	http://www.totottheo.com/
France	MACOR (Amarix Group)	http://www.macor.fr/
Germany	Ing.-Buero Querin GmbH	www.querin.com
	Karle & Fuhrmann	http://www.karle-fuhrmann.de/
	Veinland GmbH	http://www.veinland.net/
Gibraltar	Sandvik Marine Group	http://www.sandvikservice.com/
Greece	SRH Marine Electronics S.A.	http://srhmar/
India	Adrie Marine Electronics Solution Pvt.Ltd.	http://www.adriemarine.in/
	Favourite Marine Services	http://www.favouritemarine.com/
Italy	A. Santamaria Spa	http://a-santamaria.it/
	S.I.R.M. spa	http://www.sirmspa.it/
Japan	Bemac Uzushio Electric Company Ltd	http://www.bemac-uzushio.com/
Lithuania	RSB Novikontas Ltdd	http://www.novikontas.eu/
Mexico	Marine Radio Surveyors	http://www.marineradiosurveyors.com/
Ne	Navico	http://navico.com/
Nigeria	Radial Circle Telecommunications Ltd	https://radialcircle.com/
Panama	Electromar Services SA	http://www.electromarpanama.com/
	Hi-Tek Marine S.A	http://www.hitekmarine.com/
	Intermaritime Group	https://intermaritime.org/
	Talleres Industriales SA	http://www.talleresindustriales.com/
Poland	Enamor	http://www.enamor.com.pl/
	EPA Marine sp. z o.o	http://epamarine.pl/
Romania	Navtron SRL	http://www.navtron.ro/
Singapore	Cyclect Electrical Engineering PTE Ltd	https://www.cyclect.com.sg/cyclect/
	Jason Electronics Pte. Ltd.	http://www.jason.com.sg/
	New Funnels (s) Pte Ltd	http://newfunnels.com.sg/home.php
South Africa	SMD Telecommunications Pty (Ltd)	http://www.smd-marine.com/
Spain	AAGE Hempel	http://www.aagehempel.com/
	Alconza Berango S.L.	http://www.alconza.com/
	Crosscomar S.L.	http://crosscomar.com/
	Hermanos Alfaro	http://www.halfaro.com/
Sweden	Laholm Marine & Industry Services AB	http://www.lmis.se/
Turkiye	Polar Marine Group of Companies	http://www2.polarmarine.com/
United Kingdom	S.I.R.M. UK	http://www.sirmspa.it/en/
U.S.A	Belfor Holdings Inc.	http://www.belfor.com/
	Koffler Electrical Mechanical Apparatus Repair	http://www.koffler.com/index.html
	Rice Electronics	http://www.riceelectronics.com/
	Seaboard Controls INC	http://www.seaboardcontrols.com/
Venezuela	Radio Marina de Venezuela	http://www.radiomarinagroup.com/web/

Worldwide Sales Network

AUSTRALIA

MARINEBOYS E&T
1/ 3 Lerista Crt, Bibra Lake, WA 6163
AUSTRALIA
Tel : +61 8 9434 1721
Fax : +61 8 9434 1721
E-mail : tradings@marineboys.net

Korea Office
22 Daewoon 7Gil Yangsan 50525 South Korea
Tel : +82 (0)70 7519 7176
E-mail : kor@marineboys.net

BRAZIL

M&O PARTNERS
Manhattan Tower Av. Rio Branco, 89 sala 802 Centro – 20040-004 Rio de Janeiro, BRAZIL
Tel : +55 21 3239 4850
E-mail : marcus.mazza@mopartners.global
www.mopartners.global

CHINA

SHANGHAI KNOW-HOW TECHNOLOGIES CO., LTD
Floor 5th, G10, Lane 3188 Xiu Pu Road, Kang Qiao, Pudong Shanghai 201315 P.R. CHINA
Tel : +86 21 6443 9428
Fax : +86 21 6404 1979
E-mail : shanghai@khmrine.com
www.khmarine.com

HANS BELL EQUIPMENT LTD
Room 1807, Fusheng building, No. 3 Fuxing avenue, Fuxing investment zone, Fuzhou city,350014 CHINA
Tel : +86 591 8785 0152
Fax : +86 591 8785 8152
E-mail : info@hansbell.com
www.hansbell.com

SINHOO GROUP
Room 611, Block 6, No.3611 Zhangyang Road, Pudong New District Shanghai, P. R. China Zip:200136
Tel : +86 21 5019 7019
Fax : +86 21 5019 7019
E-mail : info@sinhoogroup.com
www.sinhoogroup.com

HAI CHEUNG TRADING CO
Rm 1106,Building A, Biyun Mansion, No.289 Zheqiao Road,Pudong,Shanghai, CHINA
Tel : +86 21 6168 2673
Fax : +86 21 6168 2675
E-mail : shanghai@haichuanhk.com
www.haichuanhk.com

LS MARINE CO., LTD.
Room 1006, No. 3 Corporate campus, No. 1505, Lianhang Road, Pujiang, MinHang District, Shanghai, 201112, P.R.CHINA
Tel : +86 21 5835 8980
Fax : +86 21 58358981
E-mail : wyj@hkl-z.com
www.lslng.com

SKYFLY MARINE (H.K.) LIMITED
Room 705, No. 666 Keji Road, Gao District, Weihai City, Shandong Province, China.
Tel : +86(0)13561810038
E-mail : 13561810038@139.com

HONGKONG GREAT INTERNATIONAL ENTERPRISE CO., LIMITED
Room 1920,Building A4,The Wanda P laza,Gangzha District,Nantong City,Jiangsu Province,China p.c.:226000
Mobile : 15896276111
E-mail : sales@hsgj-hk.com

GERMANY

NIPPON DIESEL SERVICE GMBH
Hermann-Blohm-Str. 1 20457 Hamburg, GERMANY
Tel : +49 40 31771046
Fax : +49 40 311598
E-mail : btr@nds-marine.com
www.nds-marine.com

INDIA

PENTA ELECTROMEC PVT LTD
602, Rajhans, Opp. Gaon Devi Bus Depot, Naupada, Thane (W), Mumbai - 400 602, Maharashtra, INDIA
Tel : +91 22 2537 8734
E-mail : penfac@pentaindia.co.in

JAPAN

UZUSHIO ENTERPRISE
105 Noma, Imabari City, Ehime Pref, 794-8582 JAPAN
Tel : +81 0898 52 8210
Fax : +81 0898 52 8211
www.bemac-uzushio.com

BOGO CO.,LTD
Rich-w b/d 306, 321-1, Dangri-dong, Saha-gu, Busan KOREA
Tel : +82 51 220 2023
Fax : +82 51 294 7772
www.bogoco.co.kr

S.J.CORPORATION LTD
5th, Haebodng bldg, 289, Junang Daero, Dong-gu, Busan KOREA
Tel : +82-51-466-2547
Fax : +82-51-466-2548
www.sejincorp.com

DOT EL
6-8-13, Shingai-cho, Fukuyama-city, Hiroshima-pref JAPAN
Tel : +81 084 9811767
E-mail : n.yoshihisa@hi.enjoy.ne.jp

KYOKUYO ELECTRICCO.,LTD.
1-19-1, Chiyosaki, Nishi-ku, Osaka JAPAN
Tel : +81 06 6581 5815
www.kyokuyoe.co.jp

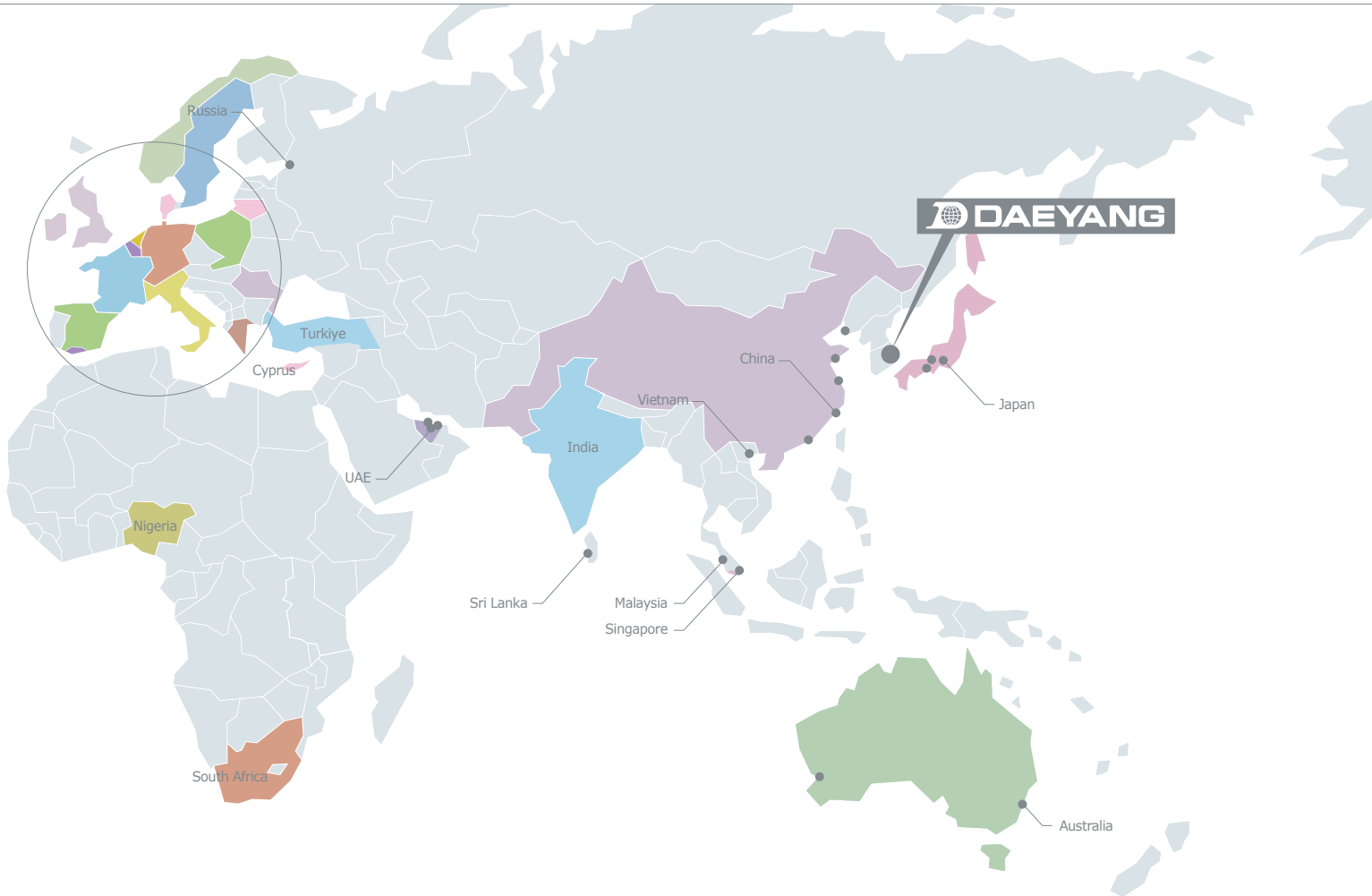

Ver. 2022-07-29

PILS CO., LTD.
#1208, Byucksan Digital Valley B/D,
Daedong-Ro 303, Sasang-Gu, Busan,
46981, KOREA
Tel : +82 51 718 0726
Fax : +82 51 329 8733
www.pils.co.kr

SOJITZ MARINE & ENG
Onomichi Office 3f Roku Hotta Bldg 14-15,
Nishigosho-cho, Onomichi, Hiroshima JAPAN
Tel : +82 51 463 6010
E-mail : kdkim@nimac.co.kr

Korea office
KNN tower #1606, 30 Centum Seo-ro,
Haeundae-gu, Busan, KOREA (48058)

SAMHWA TRADINGCO., LTD
189, Bosu-daero, Seo-gu, Busan-city,
49216, KOREA
Tel : +82 51 831 1660
+82 51 831 1660
www.shtc.kr

MALAYSIA
ESSEM CORPORATION SDN BHD
C-7-1, BLOCK C, Melawati Corporate Centre,
Jalan Bandar Melawati, 53100 Kuala Lumpur,
MALAYSIA
Tel : +603 4101 0200
Fax : +603 4101 0210
E-mail : yennymky@essemgroup.net
albertsim@essemgroup.net
www.essemgroup.net

NORWAY
M&O PARTNERS AS
Vestre Strømkaien 7 8th Floor, 5008,
Bergen, NORWAY
Tel : +47 930 17 941
E-mail : roar.berge@mopartners.global
www.mopartners.global

RUSSIA
NTI LTD.
199226, Russia, Saint-Petersburg,
Nakhimova street 20, lit. A, 10th floor
Tel : +7 812 4244846
E-mail : lux@nticorp.ru
www.nticorp.ru

SINGAPORE
ZIRCON ENGINEERING PTE LTD
No. 7 Kaki Bukit Crescent, Fullion Building
SINGAPORE 416239
Tel : +65 6288 8889
Fax : +65 6283 8889
E-mail : yeokianwee@zircon.com.sg

SRI LANKA
DUBUTA GROUP
422/2B Owen Gunawardena Mawatha Off
Robert Gunawardena Mawatha Battaramulla.
SRI LANKA
Tel : +94 777 739 732
E-mail : duleej@dubuta.com

TURKIYE
BETEX
Rauf Orbay Cad. No:17 Kat:2 Tuzla 34944
Istanbul, TURKIYE
Tel : +90 216 446 23 15 (117)
E-mail : betex@betex.com.tr
www.betex.com.tr

UAE
OFFSHOREMARINE TRADING LLC
P.O. Box 33297 Dubai Investment Park
United Arab of Emirates
Tel : +971 4 8124390
Fax : +971 4 8124398
E-mail : offshore@offshoremarine.ae

ELCOME INTERNATIONAL LLC
Dubai Investments Park 598-1121, PO Box
1788, Dubai, UAE
Tel : +971 4 812 1333
Fax : 61-8-9434-1721
E-mail : m.nadheer@elcome.com

PETROMAR ENERGY SERVICES
Addax Tower office no.4803/4/5 City of
Lights, Al Reem Island PO.Box 47858 Abu
Dhabi UAE
Tel : +971 2 644 4557
Fax : +971 2 645 5033
E-mail : ashis@petromar.ae
(Sales Manager)
www.petromar-thecompany.com

USA
KIMPEX INC
18831 Bardeen Avenue, Suite 101 Irvine,
CA 92612
Tel : +1 949 679 7890
E-mail : help@kimpexusa.com

VIETNAM
HANKANG INC
HEAD Office Unit 631, Daewoo i-vill, 641
Nonhyeon-Ro, Gangnam-gu, Seoul, KOREA
Tel : +82 2 443 7640
Fax : +82 2 443 7639
E-mail : hankangincso@gmail.com

HANOI OFFICE/VIETNAM
Office Unit 406, DMC Tower, 535 Kim ma,
Ba dinh district, Hanoi, VIETNAM
Tel : +84-4-3726-1227
Fax : +84-4-3726-1230
E-mail : hankang.sg@gmail.com

Daeyang Electric Company
Worldwide Network

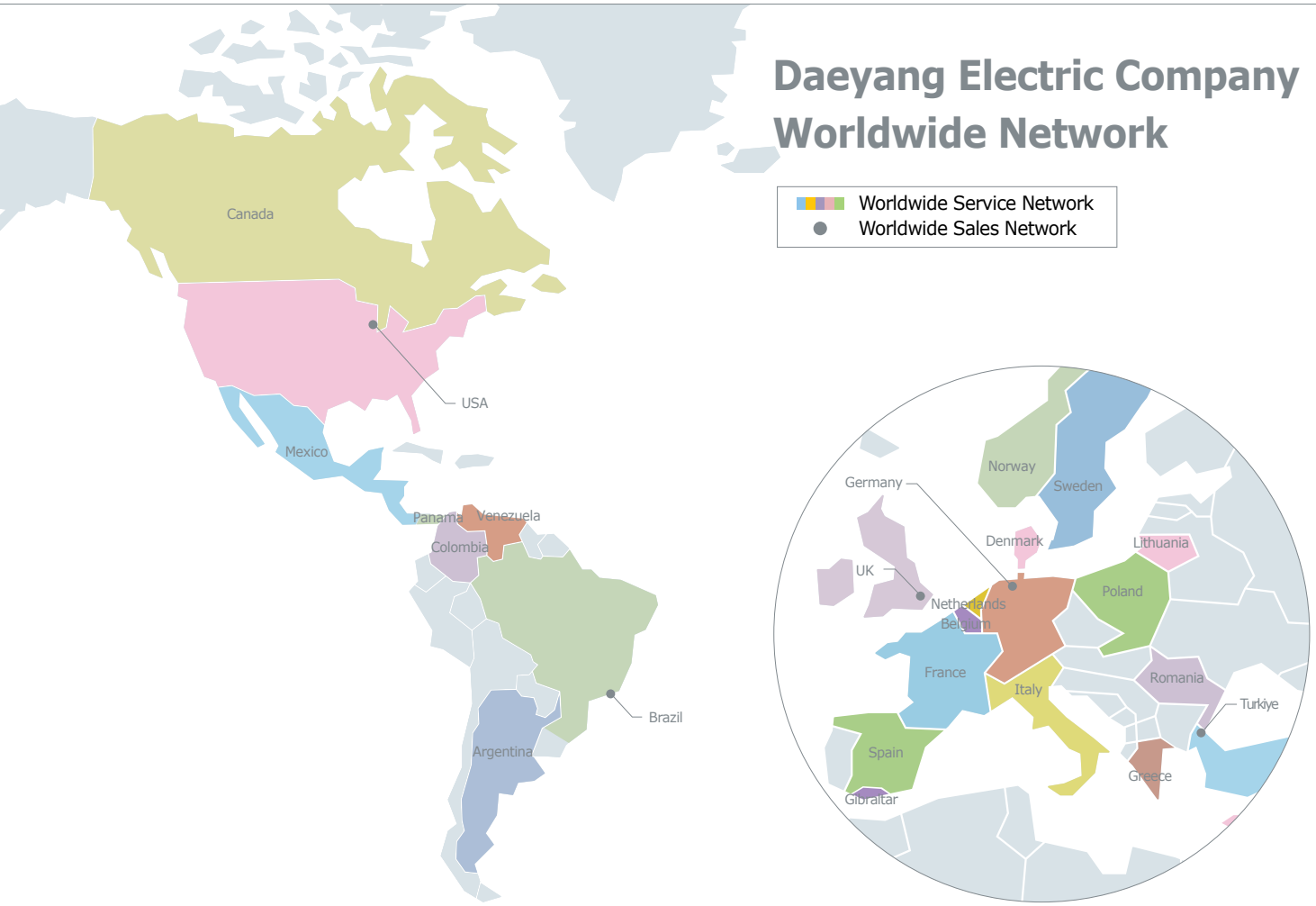

Ver. 2022-07-29

DAEYANG

DAEYANG QR Code
You can see more detailed information about our products take a QR.

DAEYANG ELECTRIC

HEAD OFFICE , LIGHTING DIVISION
245 Jangpyeong-ro,
Saha-gu, Busan, Korea
Tel. 82-51-200-5213, 5214, 5284, 5315
Fax. 82-51-200-5210, 5310

SI DIVISION
45-16 Noksansandan 261-ro 14beon-gil, Gangseo-gu,
Busan, Korea
Tel. 82-51-200-5401~5408
Fax. 82-51-204-1991

SENSOR DIVISION
16 Venture-ro 100beon-gil,
Yeonsu-gu, Incheon, Korea
Tel. 82-32-830-5515
Fax. 82-32-830-5509

R&D CENTER
45-10 Noksansandan 261-ro 14beon-gil, Gangseo-gu,
Busan, Korea
Tel. 82-51-200-5462, 5485
Fax. 82-51-200-5499

Central R&BD Centre
36, Magokjungang 14-ro,
Gangseo-gu, Seoul, 49438, Korea
Tel. 82-2-3458-7602
Fax. 82-2-3458-7609

Affiliated Companies

DAEYANG INSTRUMENT Co.,LTD
45-10 Noksansandan 261-ro 14beon-gil,
Gangseo-gu, Busan, Korea
Tel. 82-51-200-9720, 9721, 9722
Fax. 82-51-200-9719

DAEYANG ELECTRIC SUPPLY Co.,LTD
233 Dusong-ro, Saha-gu, Busan, Korea
Tel. 82-51-414-9937
Fax. 82-51-414-9940